TEAR SHEET

Langham Medium Picture Light

Item # RL 2787PN

Designer: Ralph Lauren

Height: 2.5"
Width: 24"
Extension: 5.25" - 6.75"
Backplate: 12" x 2.5" Rectangle
Finishes: BZ, NB, PN
Socket: Dedicated LED
Wattage: 18w (1800lm)
Weight: 5 Pounds

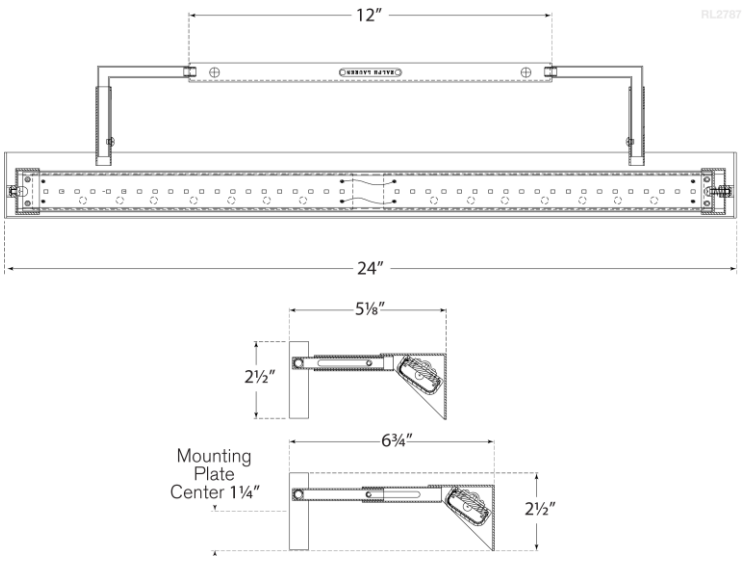

VISUAL COMFORT