TEAR SHEET

Alberto Large Floor Lamp

Item # JN 1002AGL-L

Designer: Julie Neill

Height: 60"
Width: 18"
Base: 10.75" Round
Finishes: ABL, AGL, BSL, PW
Shade Treatments: L
Shade Details: 15" x 18" x 12.5"
Socket: E26 Dimmer
Wattage: 100 A19
Weight: 21 Pounds

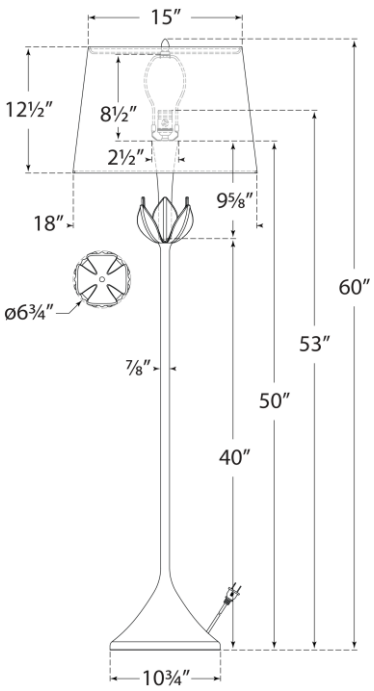

VISUAL COMFORT