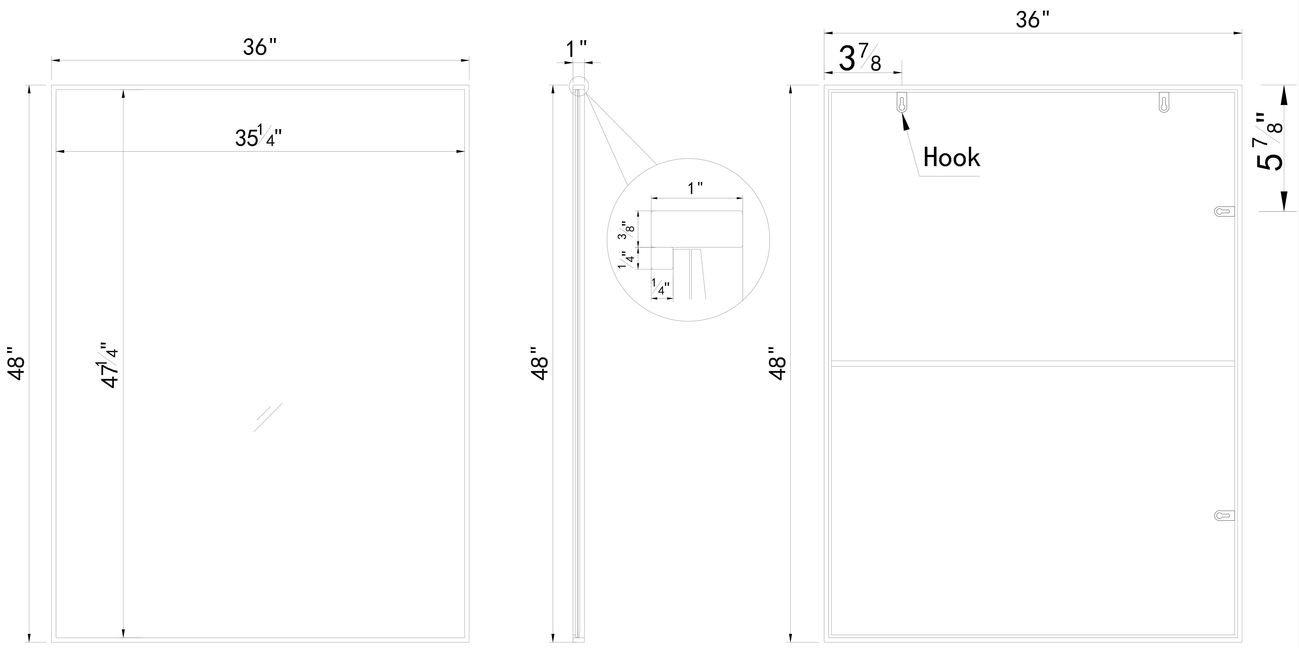

Front view

Side view

Back view

DWG. NO.

MODEL NO: MR43648GR

SPEC NO:

QUANTITY:

DATE:

CHECKED BY:

FOR PROPOSAL ONLY ALL DIMENSIONS TO BE VERIDIED

PROJECT:

COLOR:

FINISH:

REVISIONS

1
2
3
4
5
6

ELEGANT FURNITURE & LIGHTING™

500-550 E. Erie Avenue

Philadelphia PA 19134

1-888-388-3390

Model #	Product Type	Style	Product Width (in)	Product Depth (in)	Product Height (in)	Mirror Width	Mirror Depth
MR43648GR	Mirror	Contemporary	36	1	48	35.25"	0.16"
Mirror Height	Frame shape	Orientation	Frame finish	Frame material	Mounting / attachment type	Number of brackets	Beveled glass
47.25"	Rectangle	Vertical and Horizontal	Grey	Metal and MDF	Metal Inset hanger	4	Yes
Frameless	Package LENGTH	Packaged WIDTH	Packaged HEIGHT	Package Weight	Product weight	Shipment Type	
No	51.54	39.54	3.15	39.29	33.99	Small Parcel	

DWG. NO.

MODEL NO: MR43648GR

SPEC NO:

QUANTITY:

DATE:

CHECKED BY:

FOR PROPOSAL ONLY ALL DIMENSIONS TO BE VERIDIED

PROJECT:

COLOR:

FINISH:

REVISIONS

1
2
3
4
5
6

ELEGANT FURNITURE & LIGHTING™

500-550 E. Erie Avenue

Philadelphia PA 19134

1-888-388-3390